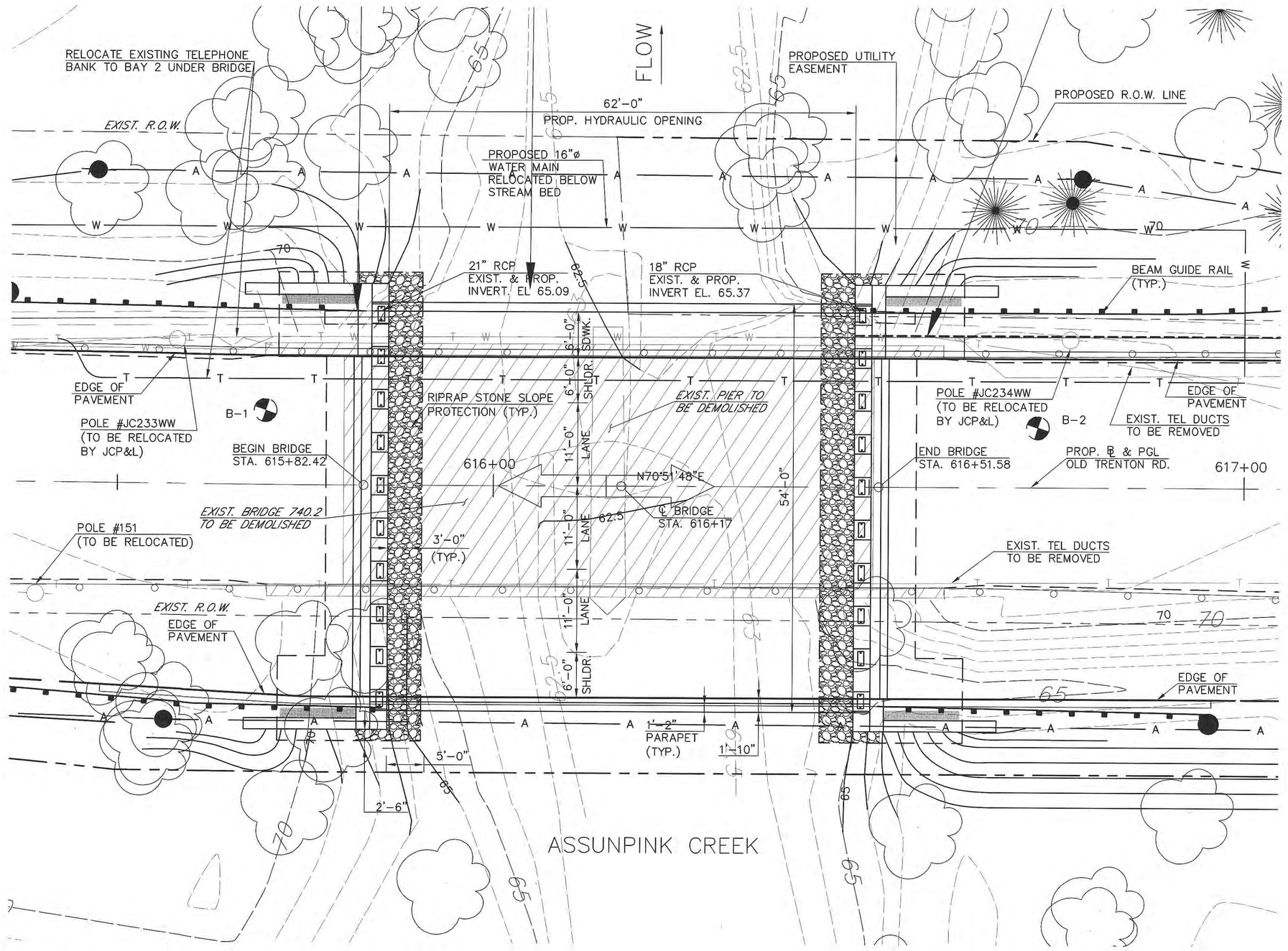

PLAN

SCALE: 1" = 10'-0"

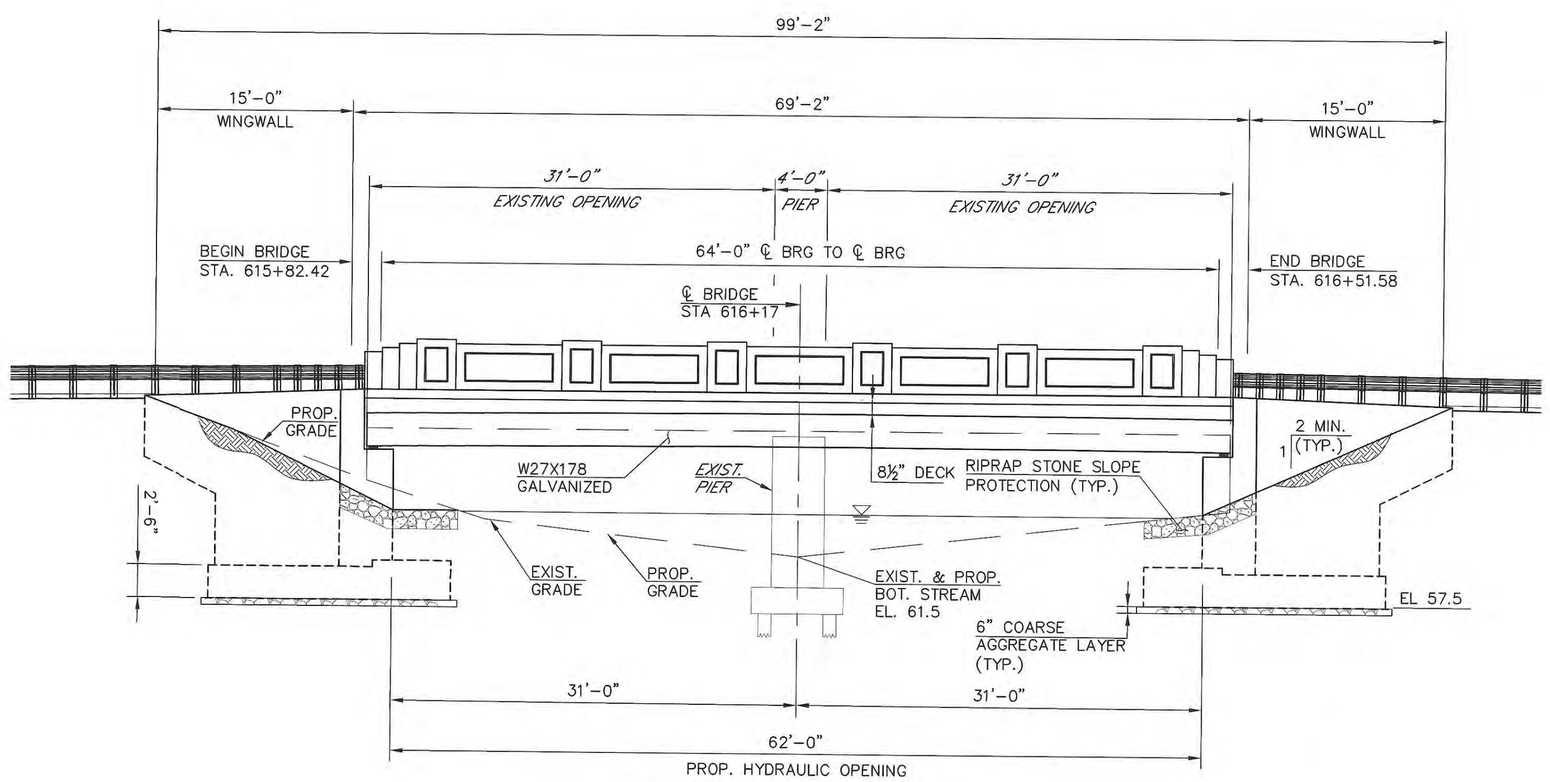

SOUTH ELEVATION

SCALE: ⅛" = 1'-0"

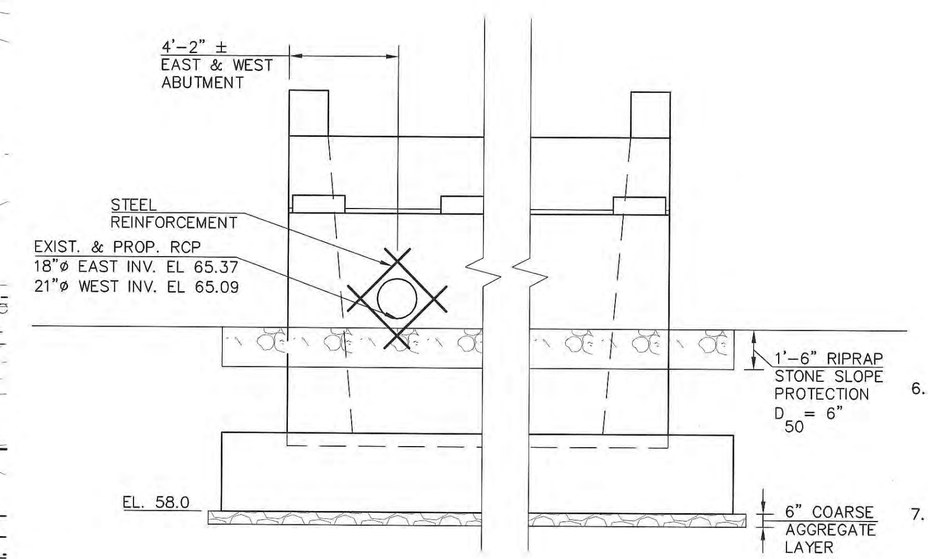

EAST ABUTMENT ELEVATION

(EAST ABUTMENT SHOWN, WEST ABUTMENT SIMILAR)

SCALE: ¼" = 1'-0"

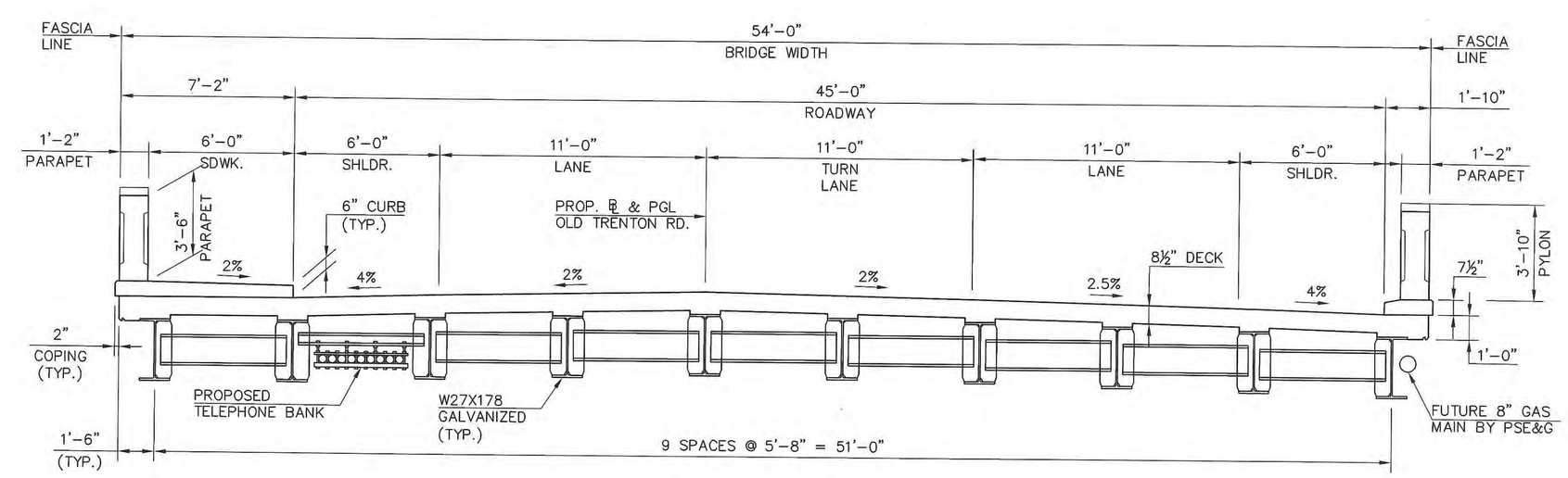

TYPICAL SECTION

SCALE: ¼" = 1'-0"

DESIGN SPECIFICATION

1. DESIGN SPECIFICATIONS
   17TH EDITION AASHTO STANDARD SPECIFICATIONS FOR HIGHWAY BRIDGES WITH CURRENT INTERIMS, AS MODIFIED BY SECTION 3 OF NJDOT DESIGN MANUAL FOR BRIDGES AND STRUCTURES, FORTH EDITION 2002.

2. CONSTRUCTION SPECIFICATIONS
   2001 NJDOT STANDARD SPECIFICATIONS FOR ROAD AND BRIDGE CONSTRUCTION, AS AMENDED, BY MERCER COUNTY SUPPLEMENTAL SPECIFICATIONS.

3. LIVE LOAD
   AASHTO HS20-44 + 25% (HS-25) OR TANDEM 24 KIP AXELS AT 4 FOOT CENTERS, WHICHEVER GOVERNS.

4. DEAD LOAD
   DEAD LOAD INCLUDES 25 LBS/SQ. FT PROVISION FOR A FUTURE OVERLAY WEARING SURFACE.

5. CAST-IN-PLACE CONCRETE
   ALL CAST-IN-PLACE SUPERSTRUCTURE CONCRETE SHALL BE NEW JERSEY CLASS-A AIR-ENTRAINED. FOOTING CONCRETE SHALL BE CLASS B. ALL EXPOSED OUTSIDE CONCRETE CORNERS SHALL HAVE ¾ INCH CHAMFER.

   CONCRETE DESIGN STRESSES:
   A. SPECIFIED DESIGN COMPRESSIVE STRENGTH (F'c) (IN ACCORDANCE WITH THE RETEST LIMIT AS SPECIFIED IN SECTION 914 OF THE SPECIFICATIONS)
      CLASS A CONCRETE (F'c) = 4,000 PSI
      CLASS B CONCRETE (F'c) = 3,000 PSI

   B. CLASS DESIGN STRENGTH (IN ACCORDANCE WITH SECTION 914 OF THE SPECIFICATIONS)
      CLASS A = 4,600 PSI
      CLASS B = 3,700 PSI

   C. ALLOWABLE STRESS EXTREME FIBER IN COMPRESSION (Fc)
      CLASS A CONCRETE Fc = 1,600 PSI
      CLASS B CONCRETE Fc = 1,200 PSI
      DECK SLAB (CLASS A) = 1,400 PSI

6. FOUNDATION DESIGN CRITERIA:
   SOIL PROFILE TYPE.....I
   SITE SOIL COEFFICIENT (S).....1.0
   PEAK ACCELERATION COEFFICIENT A.....0.15
   ALLOWABLE BEARING PRESSURE (Qall).....4 KSF

7. COEFFICIENT AT BASE FRICTION
   IN-SITU SOIL.....0.45
   NJDOT No. 57 STONE.....0.60

8. BORINGS
   INDICATES LOCATION OF BORING, SEE APPENDIX OF SUPPLEMENTAL SPECIFCATIONS FOR BORING LOGS

*FOR INFORMATION ONLY

NUMBER	DATE	REVISION
1	9-12-07	ADDED EAST ABUT. ELEV. DETAIL
2	11-07-07	REVISED PER SCD COMMENTS

FRENCH & PARRELLO
ASSOCIATES P.A. CONSULTING ENGINEERS
1800 Route 34, Suite 101 • Wall, NJ • 07719 • 732 312-9800

STEVEN A. TARDY, P.E.
PROFESSIONAL ENGINEER, NJ LIC. No. 38934

B-3 / B-XX

GENERAL PLAN & ELEVATION
FOR
THE REPLACEMENT OF MERCER COUNTY BRIDGE NUMBER 740.2
OLD TRENTON ROAD (COUNTY ROUTE 526) OVER ASSUNPINK CREEK
WEST WINDSOR TOWNSHIP
MERCER COUNTY NEW JERSEY

DATE:	SCALE:	PROJECT NUMBER:
JUNE 2011	AS SHOWN	05T026A
DESIGN BY: SCC	CHECKED BY: SAT	SHEET: 26 OF 26

PLOTTED BY: STEPHEN.CLARK 7-05-11
FILE: L:\TR\2005\05T026-MERCER BRIDGE 740.2\DWG\BRIDGE\PLANS\B01-026-05T026-GENERAL PLAN & ELEVATION.DWG (LAYOUT)